Joy®

BSCI Business Social Compliance Initiative | ISO | Sedex | CE | RoHS COMPLIANT | FC

CHINA JOY KEYBOARDS CO.,LTD.

No.99 Hudong Road, Fuzhou, Fujian, China
Tel:(86-591)8760 0018, 8760 1818
Fax:(86-591)8760 0618
jk@chinakeyboards.com
www.chinakeyboards.com

E-CATALOG

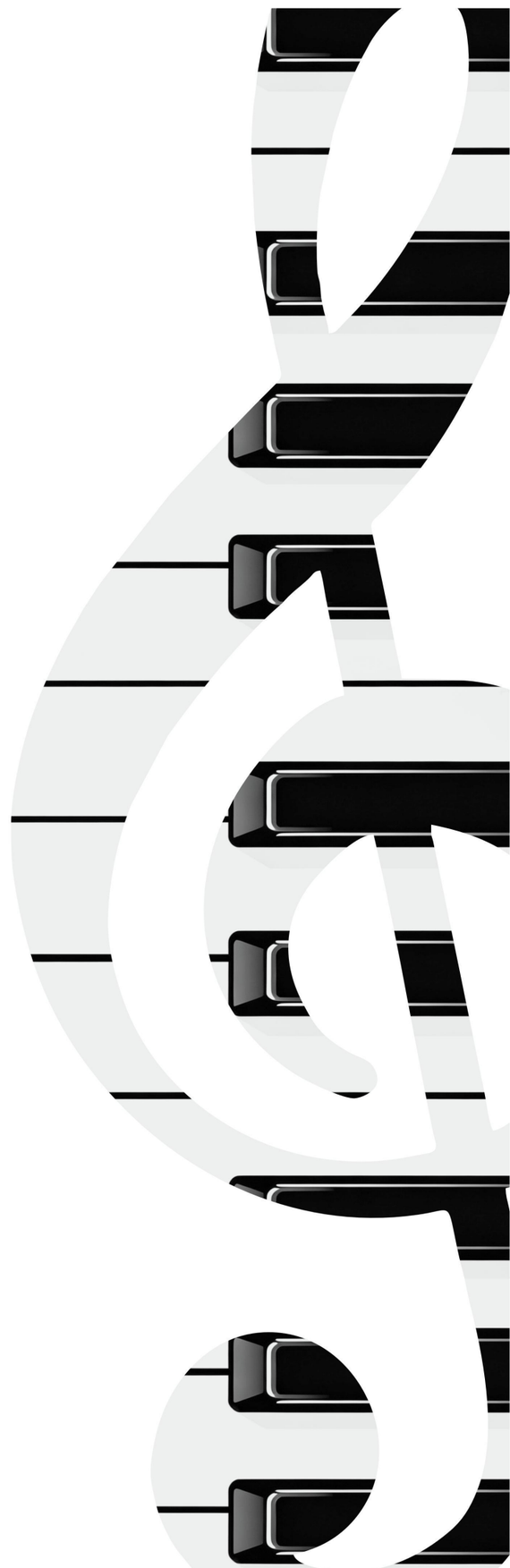

Joy®

ELECTRONIC KEYBOARD

ABOUT US

CHINA JOY KEYBOARDS CO., LTD. is a professional enterprise engaged in the R&D, production, and sales of electronic keyboards.
Boasting excellent cost-effectiveness and dependable quality, we are the long-term preferred partner for leading supermarket chains, global retailers, and musical instrument distributors worldwide.

WHY PARTNER WITH US?

- **Mass Production Capacity**: 10 professional production lines, with a monthly output of 32,000 units.
- **On-Time & Fast Delivery**: 30-day fast delivery and reasonable MOQ options.
- **Audited & Certified Factory**: Meeting Tier-1 compliance with BSCI and ISO14001 certifications, fully verified by top global retailers.
- **International Standards Approved**: Products comply with international standards including CE, RoHS, FCC, as well as adapter safety certifications such as UL, GS, SAA, and BS.
- **Reliable Factory Quality**: 100% product inspection commitment: 100% individual inspection by highly experienced internal QC prior to every shipment.

Serving markets worldwide, our musical keyboards are highly trusted and recognized by global buyers. Browse our catalogue and contact us for inquiries.

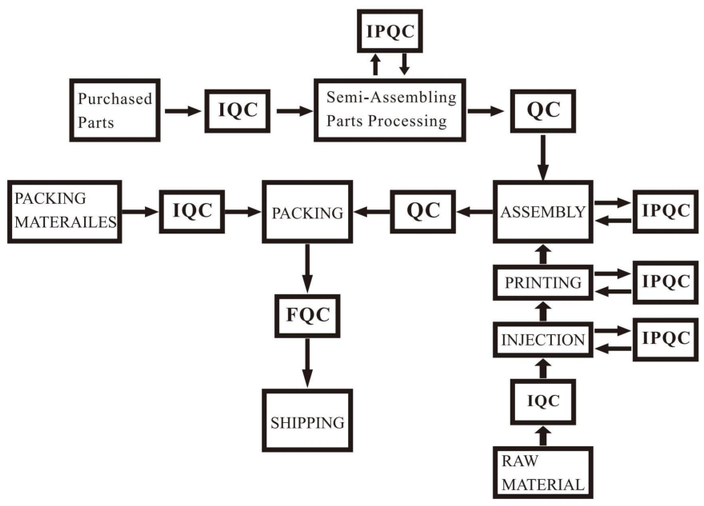

Multiple Links to Control Quality

CONTENTS

61 KEYS STANDARD ELECTRONIC KEYBOARD

NEW P2-4 JK-1000 JK-295 JK-296 JK-29
P7 JK-KC1 KL-KC1
P12-15 JK-82M KL-95U KL-91M JK-93B JK-69M JK-90M
P16-18 JK-68 JK-67M KL-90M JK-63M JK-58 KL-58

61 KEYS PROFESSIONAL ELECTRONIC KEYBOARD

P4-5 JK-291 JK-292 KL-292
P8-11 KL-92UT JK-87DT JK-85MT KL-83UT JK-83UT JK-80MT

61 KEYS TEACHING TYPE ELECTRONIC KEYBOARD

P19-22 JK-SD1 JK-27 KL-27 JK-57 KL-97 JK-62M
P23-24 JK-61 JK-60 JK-33

54 KEYS ELECTRONIC KEYBOARD

P14-26 JK-54 K-10M K-09 K-07 K-08 K-11

49 KEYS ELECTRONIC KEYBOARD

P26 M-01

37 KEYS ELECTRONIC KEYBOARD

P6 M-07 M-06

25 KEYS MIDI CONTROLLERS

P27 MID-25

88 KEYS PORTABLE DIGITAL PIANO

P28-30 WP-882 DP-881 DP-881L

P31 UNIVERSAL STAND FOR ELECTRONIC KEYBOARD
P32 ACCESSORIES FOR ELECTRONIC KEYBOARD

NEW



Specifications

JK-1000

- 61-Key Standard Piano Keyboard
- Touch-Sensitive Function Key
- LCD Display
- 430 Timbres / 300 Rhythms / 50 Demonstration Songs
- Keyboard Percussion
- Master Volume / Accom Volume / Tempo Control
- Start / Stop / Intro / Ending / Sync / Fill-in / Metronome
- Single Chord / Fingered Chord
- Rhythm Programming Function / Record & Playback
- Transpose Control / Sustain / Vibrato / Dual / Keyboard Split Feature
- X/Y Joystick: Pitch Bend / Vibrato
- Memory: M1 / M2
- 3-Step Lesson: One-Key / Follow / Ensemble
- Phone/Output Jack / Audio Input Jack
- Sustain Pedal Jack / USB-MIDI(APP) Jack
- Product Dimensions: 930 x 304 x 93 (mm)
- Power Supply: 6"AA" Batteries (Not included) / DC 9V / AC Adaptor

430 TIMBRE音色 | 300 RHYTHM节奏 | 50 SONG示范曲 | Audio Input 音频输入 | 3步教学 3-STEP LESSON | USB / MIDI

Gross WT(kg)	23.8
Net WT(kg)	17.5
PCS/CTN	5
CTN Format(cm)	69.5 x 38.5 x 99.5

Loading: 20': 510 pcs
40': 1075 pcs
40'HQ: 1260 pcs





61 KEYS STANDARD ELECTRONIC KEYBOARD

NEW



Specifications

JK-295

- 61-Key Standard Piano Keyboard
- LED Display
- 400 Timbres / 400 Rhythms / 50 Demonstration Songs
- Keyboard Percussion
- Master Volume / Accom Volume / Transpose / Tempo Control
- Start/Stop / Sync / Fill-in / Metronome
- Auto Chord / Chord Timbre
- Rhythm Programming Function / Record & Playback
- Sustain / Vibrato / Keyboard Split Feature
- Memory / M1 / M2 / M3
- 3-Step Lesson: One-key / Follow / Ensemble
- Sustain Pedal Jack / MIC Jack /Audio Input Jack / Phones/Output Jack
- Product Dimension: 915 x 242 x 79(mm)
- Power Supply: DC 9V / AC Adaptor

400 TIMBRE音色 | 400 RHYTHM节奏 | 50 SONG示范曲 | 3步教学 3-STEP LESSON | Audio Input 音频输入

Gross WT(kg)	26
Net WT(kg)	17
PCS/CTN	6
GIFTBOX Size(cm)	95X12X29
CTN Format(cm)	73X31X97.5

Loading: 20': 732 pcs
40': 1548 pcs
40'HQ: 1818 pcs

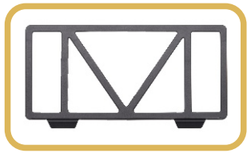



NEW



Specifications

JK-296

- 61-Key Standard Piano Keyboard
- LCD Display
- 400 Timbres / 400 Rhythms / 50 Demonstration Songs
- Keyboard Percussion
- Master Volume / Accom Volume / Transpose / Tempo Control
- Start/Stop / Sync / Fill-in / Metronome
- Auto Chord / Chord Timbre
- Rhythm Programming Function / Record & Playback
- Sustain / Vibrato / Keyboard Split Feature
- Memory / M1 / M2 / M3
- 3-Step Lesson: One-key / Follow / Ensemble
- Sustain Pedal Jack / MIC Jack /Audio Input Jack / Phones/Output Jack
- Product Dimension: 915 x 242 x 79(mm)
- Power Supply: DC 9V / AC Adaptor

400 TIMBRE音色 | 400 RHYTHM节奏 | 50 SONG示范曲 | 3步教学 3-STEP LESSON | Audio Input 音频输入

Gross WT(kg)	26
Net WT(kg)	17
PCS/CTN	6
GIFTBOX Size(cm)	95X12X29
CTN Format(cm)	73X31X97.5

Loading: 20': 732 pcs
40': 1548 pcs
40'HQ: 1818 pcs

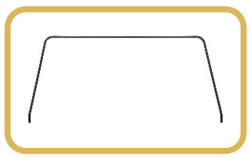



61 KEYS STANDARD ELECTRONIC KEYBOARD



JK-29

Specifications

- 61–Key Standard Piano Keyboard
- LED Display
- 256 Timbres (6 Voice Direct Election)
- 256 Rhythms / 24 Demonstration Songs
- Keyboard Percussion
- Tempo / Master Volume / Rhythm Volume / Chord Volume Control
- Single Finger / Fingered Chord / Chord Timbre
- Start/Stop / Sync / Fill–in / Metronome
- Rhythm Programming Function / Record & Playback
- Click / Sustain / Vibrato / Keyboard Split Feature / Transpose
- Memory / M1 / M2 / M3
- One–key / Follow / Ensemble
- MIC Jack /Audio Input Jack / Phone/Output Jack
- Product Dimension: 915 x 242 x 79(mm)
- Power Supply: DC 5V by USB–C line(adaptor included)

256 TIMBRE 音色 | 256 RHYTHM 节奏 | 24 SONG 示范曲 | 3 步教学 3-STEP LESSON | Audio Input 音频输入

Gross WT(kg)	26
Net WT(kg)	17
PCS/CTN	6
GIFTBOX Size(cm)	95X12X29
CTN Format(cm)	73X31X97.5

Loading: 20': 732 pcs
40': 1548 pcs
40'HQ: 1818 pcs



JK-291

Specifications

- 61–Key Simulation Piano Keyboard With Touch Function
- LCD Display
- 256 Timbres （6 Voice Direct Election）
- 256 Rhythms / 24 Demonstration Songs
- Keyboard Percussion
- Tempo / Master Volume / Rhythm Volume / Chord Volume Control
- Single Finger / Fingered Chord
- Start/Stop / Sync / Fill–in / Metronome
- Rhythm Programming Function / Record & Playback
- Click / Touch / Sustain / Vibrato / Keyboard Split Feature / Transpose
- Memory / M1 / M2 / M3
- One–key / Follow / Ensemble
- MIC Jack /Audio Input Jack / Phone/Output Jack
- Product Dimension: 915 x 242 x 79(mm)
- Power Supply: DC 5V by USB–C line(adaptor included)

256 TIMBRE 音色 | 256 RHYTHM 节奏 | 24 SONG 示范曲 | 3 步教学 3-STEP LESSON | Audio Input 音频输入 | TOUCH 力度

Gross WT(kg)	26
Net WT(kg)	17
PCS/CTN	6
GIFTBOX Size(cm)	95X12X29
CTN Format(cm)	73X31X97.5

Loading: 20': 732 pcs
40': 1548 pcs
40'HQ: 1818 pcs

61 KEYS PROFESSIONAL ELECTRONIC KEYBOARD





JK-292/KL-292

Specifications

- 61–Key Simulation Piano Keyboard / Lighting Piano Keyboard
- LCD Display
- 430 Timbres (6 Voice Direct Election)
- 300 Rhythms / 50 Demonstration Songs
- Keyboard Percussion
- Tempo / Master Volume / Rhythm Volume / Chord Volume Control
- Single Finger / Fingered Chord / Chord Timbre
- Start/Stop / Sync / Fill–in / Intro / Ending / Metronome
- Rhythm Programming Function / Record & Playback
- Click / Touch / Sustain / Vibrato / Dual Timbres / Keyboard Split Feature / Transpose
- Memory / M1 / M2 / M3
- 3–Step Lesson: One–key / Follow / Ensemble
- USB–MIDI / Sustain Pedal jack / MIC Jack /Audio Input Jack / Phone/Output Jack
- Product Dimension: 915 x 242 x 79(mm)
- Power Supply: DC 9V / AC Adaptor

430 TIMBRE 音色 | 300 RHYTHM 节奏 | 50 SONG 示范曲 | 3 步教学 3-STEP LESSON | Audio Input 音频输入 | MEMORY 状态记忆 | TOUCH 力度 | MIDI | SUSTAIN PEDAL 延音踏板

Gross WT(kg)	26
Net WT(kg)	17
PCS/CTN	6
GIFTBOX Size(cm)	95X12X29
CTN Format(cm)	73X31X97.5

Loading: 20': 732 pcs
40': 1548 pcs
40'HQ: 1818 pcs

37 KEYS ELECTRONIC KEYBOARD



M-07

Specifications

- 37-Key Keyboard With Touch Function
- LED Display
- 200 Timbres / 200 Rhythms / 40 Demonstration Songs
- Keyboard Percussion
- Master Volume Knob/ Play Volume / Octave / Transpose / Tune / Tempo Control
- Automatic Dormancy / Metronome Setting
- Start / Stop / Sync / Fill-in / Single Chord / Metronome
- Rhythm Programming Function / Record & Playback
- Sustain / Touch
- 3-Step Lesson: One-Key / Follow / Ensemble
- Phones / Output Jack / Type–C Jack (Power Input / USB–MIDI / APP)
- Product Dimensions: 490 x 185 x 55 (mm)
- Power Supply: 4 "AA" Batteries (Not included) / DC 5V by USB-C line (Charging head not included)

200 TIMBRE 音色 | 200 RHYTHM 节奏 | 40 SONG 示范曲 | 3 步教学 3-STEP LESSON | TOUCH 力度 | MIDI

Gross WT(kg)	25.6
Net WT(kg)	20.7
PCS/CTN	18
GIFTBOX Size(cm)	51.6X21X7.2
CTN Format(cm)	68.5 x 43 x 54.5

Loading: 20': 3024pcs
40': 6390pcs
40HQ: 7488pcs



M-06

Specifications

- 37–Key Keyboard
- 10 Timbres / 20 Rhythms / 10 Demonstration Songs
- Keyboard Percussion
- Master Volume Knob/ Play Volume / Octave / Transpose
- Tune / Tempo Control
- Start/Stop / Sync / Fill–in / Single Chord / Metronome
- Rhythm Programming Function / Record & Playback
- Sustain / Vibrato
- 3–Step Lesson: One–Key / Follow / Ensemble
- Phones/Output Jack / Type–C Power Input Jack
- Product Dimensions: 490 x 185 x 55 (mm)
- Power Supply: 4 "AA" Batteries (Not included) / DC 5V by USB–C line(Charging head not included)

10 TIMBRE 音色 | 20 RHYTHM 节奏 | 10 SONG 示范曲 | 3 步教学 3-STEP LESSON

Gross WT(kg)	24.9
Net WT(kg)	20
PCS/CTN	18
GIFTBOX Size(cm)	51.6X21X7.2
CTN Format(cm)	68.5 x 43 x 54.5

Loading: 20': 3024pcs
40': 6390pcs
40HQ: 7488pcs

61 KEYS STANDARD ELECTRONIC KEYBOARD







Specifications

JK-KC1 / KL-KC1

- 61–Key Simulation Piano Keyboard / Lighting Piano Keyboard
- LED Display
- 200 Tones / 200 Rhythms / 65 Demo Song
- Data Dial
- Master Volume / Accom Volume / Transpose /Tempo Control
- Start/Stop / Sync / Fill–in / Metronome
- Single Chord / Fingered Chord
- Click / Sustain / Vibrato
- 3–Step Lesson: One–Key / Follow / Ensemble
- Sustain Jack / MIC Jack / Phones / Output Jack / Type–C Jack (Power Input / USB–MIDI / APP)
- Product Dimensions: 895 x 213 x 58 (mm)
- Power Supply: 4 "AA" Batteries (Not included) / DC 5V by USB–C line (charging head included)

200 TIMBRE 音色 | 200 RHYTHM 节奏 | 65 SONG 示范曲 | 3 步教学 3-STEP LESSON | MIDI

Gross WT(kg)	21
Net WT(kg)	14.1
PCS/CTN	6
GIFTBOX Size(cm)	93.5 x 9 x 25.5
CTN Format(cm)	60X29.5X96

Loading: 20': 960 pcs
40': 2010 pcs
40'HQ: 2370 pcs



★ 61 Keys Lighting System.
★ Teaching APP Available by USB MIDI.

Specifications

KL-92UT

- 61–Key Lighting Keyboard With Touch Function
- Maximum Polyphony: 32
- LCD Display
- 512 Timbres / 260 Rhythms
- 65 Demonstration Songs / Keyboard Percussion
- Master Volume / Chord Volume / Rhythm Volume Control
- Single Finger / Fingered Chord / Chord Off / 4 Chord Mats
- Start / Stop / Sync / Fill–in / Metronome / Tempo Control
- Rhythm Programming Function / Record & Playback
- Pitch Bend / Vibrato / Sustain / Touch / Key Lighting
- Transpose Control / Tuning Control / Dual / Keyboard Split Feature
- Memory / M1 / M2 / M3 / M4
- One–Key / Follow / Ensemble
- MIC Jack / USB–MIDI Jack (Pad not included)
- Audio Input Jack / Phone / Output Jack
- Product Dimensions: 971 x 379 x 140 (mm)
- Power Supply: DC 12V / AC Adaptor

512 TIMBRE 音色 · 260 RHYTHM 节奏 · 65 SONG 示范曲
TOUCH 力度 · PITCH BEND 滑音轮 · VIBRATO 颤音轮
3 步教学 3-STEP LESSON · MEMORY 状态记忆 · Audio Input 音频输入
USB / MIDI

Gross WT(kg)	22
Net WT(kg)	15.5
PCS/CTN	3
GIFTBOX Size(cm)	99 x 17 x 43
CTN Format(cm)	101 x 53 x 44

Loading: 20': 345 pcs
40': 726 pcs
40'HQ: 855 pcs

KEY LIGHT

61 KEYS PROFESSIONAL PERFORMANCE
ELECTRONIC KEYBOARD



Specifications

JK-87DT

- 61–Key Simulation Piano Keyboard With Touch Function
- Maximum Polyphony: 32
- LCD Display / 345 Timbres / 128 Rhythms / 65 Demonstration Songs
- 8 Panel Percussions / Keyboard Percussion
- 211–level Tempo Control / 16–grade Master Volume Control
- 8–grade Rhythm Volume Control / 8–grade Chord Volume Control
- Single Finger / Fingered Chord / Chord Timbre / 6 Chord Mats
- Start / Stop / Rhythm Shift / Sync / Fill–in / Intro / Ending
- Rhythm Programming Function / Record & Playback
- Pitch Bend / Vibrato / Sustain / Transpose / Dual Timbres / Metronome
- Three– Bank Registration / Keyboard Split Feature
- One–Key / Guide Function
- USB–MIDI Jack / Speaker Output (L/R) / Headphone Jack
- Product Dimensions: 965 × 366 × 142 (mm)
Power Supply: 8 “D” Batteries (Not included) /
DC 12V / AC Adaptor

345 TIMBRE 音色 · 128 RHYTHM 节奏 · 65 SONG 示范曲
MEMORY 状态记忆 · PITCH BEND 滑音轮 · TOUCH 力度

Gross WT(kg)	22
Net WT(kg)	15.3
PCS/CTN	3
GIFTBOX Size(cm)	99.5 x 17 x 43
CTN Format(cm)	101.5 x 54 x 45

Loading: 20': 330 pcs
40': 696 pcs
40'HQ: 816 pcs

MIDI



Specifications

JK-85MT

- 61–Key Simulation Piano Keyboard With Touch Function
- With Music Player (Udisk not included)
- LCD Display / 600 Timbres / 300 Rhythms
- 40 Demonstration Songs / Keyboard Percussion
- Master Volume / Chord Volume / Rhythm Volume Control
- Single Finger / Fingered Chord / Chord Off
- Start / Stop / Sync / Fill–in / Metronome / Tempo Control
- Rhythm Programming Function / Record & Playback
- Pitch Bend / Vibrato / Sustain / Touch
- Transpose Control / Dual / Keyboard Split Feature
- Memory / M1 / M2 / M3 / M4
- One–Key / Follow / Ensemble
- Udisk Jack / MIC Jack / Audio Input Jack / Phone / Output Jack
- Product Dimensions: 971 x 379 x 140 (mm)
- Power Supply: DC 12V / AC Adaptor

600 TIMBRE 音色 · 300 RHYTHM 节奏 · 40 SONG 示范曲 · 3 步教学 3-STEP LESSON
MEMORY 状态记忆 · Audio Input 音频输入 · PITCH BEND 滑音轮 · VIBRATO 颤音轮
TOUCH 力度

Gross WT(kg)	21
Net WT(kg)	14.4
PCS/CTN	3
GIFTBOX Size(cm)	99 x 17 x 43
CTN Format(cm)	101 x 53 x 44

Loading: 20': 345 pcs
40': 726 pcs
40'HQ: 855 pcs

USB U盘接口



★ 61 Keys Lighting System.

★ Teaching APP Available by USB MIDI.

Specifications

KL-83UT

- 61–Key Lighting Keyboard With Touch Function
- LCD Display
- 600 Timbres / 500 Rhythms / Keyboard Percussion
- 65 Demonstration Songs: Demo. One / Demo. All
- Master Volume / Accom Volume / Tempo Control
- Start / Stop / Sync / Fill–in / Intro/Ending / Metronome
- Single Chord / Fingered Chord
- Chord Timbre / Chord Close
- Rhythm Programming Function / Record & Playback
- Touch / Sustain / Vibrato / Transpose Control / Tuning Control
- Dual / Keyboard Split Feature / Grand Piano / Key Lighting
- One–Key / Follow / Ensemble
- Memory / M1 / M2 / M3 / M4
- USB–MIDI(APP) Jack / Audio Input Jack
- MIC Jack / Phone/Output Jack
- Product Dimensions: 965 x 366 x 120 (mm)
- Power Supply: DC 12V / AC Adaptor

600 TIMBRE音色 | 500 RHYTHM节奏 | 65 SONG示范曲
3步教学 3-STEP LESSON | MEMORY 状态记忆 | Audio Input 音频输入 | TOUCH 力度
USB / MIDI

Gross WT(kg)	24.1
Net WT(kg)	17.5
PCS/CTN	4
GIFTBOX Size(cm)	100.1 x 15.5 x 42
CTN Format(cm)	64.5 x 43 x 103

Loading: 20': 380 pcs
40': 800 pcs
40'HQ: 940 pcs

KEY LIGHT

61 KEYS PROFESSIONAL PERFORMANCE
ELECTRONIC KEYBOARD



Specifications

JK-83UT

- 61–Key Simulation Piano Keyboard With Touch Function
- LCD Display
- 300 Timbres / 300 Rhythms
- 8 Panel Percussions / Keyboard Percussion
- 56 Demonstration Songs
- Tempo / Master Volume / Accom Volume Control
- Single Finger / Fingered Chord / Bass / Chord Close
- Start / Stop / Sync / Fill–in / Metronome
- Rhythm Programming Function / Record & Playback
- Touch / Sustain / Vibrato / Tune / Transpose
- Keyboard Split Feature
- One–Key / Follow / Ensemble
- USB MIDI Jack / Speaker Output(L/R) / Headphone Jack
- Product Dimensions: 965 x 366 x 120(mm)
- Power Supply: DC 12V / AC Adaptor

300 TIMBRE音色 | 300 RHYTHM节奏 | 56 SONG示范曲
3步教学 3-STEP LESSON | TOUCH 力度
USB / MIDI

Gross WT(kg)	24.6
Net WT(kg)	17
PCS/CTN	4
GIFTBOX Size(cm)	100.1 x 15.5 x 42
CTN Format(cm)	64.5 x 43 x 103

Loading: 20': 400 pcs
40': 820 pcs
40'HQ: 952 pcs



Specifications

JK-80MT

- 61–Key Simulation Piano Keyboard With Touch Function
- With Music Player (Udisk not included)
- LCD Display
- 200 Timbres / 200 Rhythms
- 20 Demonstration Songs / Keyboard Percussion
- Tempo / Master Volume / Accom Volume Control
- Single Finger / Fingered Chord / Chord Timbre / Chord Close
- Start / Stop / Sync / Fill–in / Metronome
- Rhythm Programming Function / Record & Playback
- Touch / Sustain / Vibrato / Tune / Transpose
- Keyboard Split Feature
- One–Key / Follow / Ensemble
- Udisk Jack / Audio Input Jack / Phone / Output Jack
- Product Dimensions: 965 x 366 x 120(mm)
- Power Supply: DC 12V / AC Adaptor

200 TIMBRE音色 | 200 RHYTHM节奏 | 20 SONG示范曲
3步教学 3-STEP LESSON | Audio Input 音频输入 | TOUCH 力度

Gross WT(kg)	24.1
Net WT(kg)	17.5
PCS/CTN	4
GIFTBOX Size(cm)	100.1 x 15.5 x 42
CTN Format(cm)	64.5 x 43 x 103

Loading: 20': 380 pcs
40': 800 pcs
40'HQ: 940 pcs

USB U盘接口

61 KEYS STANDARD ELECTRONIC KEYBOARD



Specifications

- 61–Key Simulation Piano Keyboard
- With Music Player (Udisk not included)
- LCD Display / 600 Timbres / 300 Rhythms
- 40 Demonstration Songs / Keyboard Percussion
- Master Volume / Chord Volume / Rhythm Volume Control
- Single Finger / Fingered Chord / Chord Off
- Start / Stop / Sync / Fill–in / Metronome / Tempo Control
- Rhythm Programming Function / Record & Playback
- Pitch Bend / Vibrato / Sustain
- Transpose Control / Dual / Keyboard Split Feature
- Memory / M1 / M2 / M3 / M4
- One–Key / Follow / Ensemble
- Udisk Jack / MIC Jack / Audio Input Jack / Phone / Output Jack
- Product Dimensions: 971 x 379 x 140 (mm)
- Power Supply: DC 12V / AC Adaptor

JK-82M

600 TIMBRE音色 | 300 RHYTHM节奏 | 40 SONG示范曲 | 3步教学 3-STEP LESSON

MEMORY 状态记忆 | Audio Input 音频输入 | PITCH BEND 滑音轮 | VIBRATO 颤音轮

USB U盘接口

Gross WT(kg)	20.9
Net WT(kg)	14.3
PCS/CTN	3
GIFTBOX Size(cm)	99 x 17 x 43
CTN Format(cm)	101 x 53 x 44

Loading: 20': 345 pcs
40': 726 pcs
40'HQ: 855 pcs



Specifications

- 61–Key Lighting Piano Keyboard
- LCD Display
- 600 Timbres / 500 Rhythms
- 65 Demonstration Songs / Keyboard Percussion
- Master Volume / Accom Volume / Tempo Control
- Single Chord / Fingered Chord
- Start/Stop / Sync / Fill–in / Metronome
- Rhythm Programming Function / Record & Playback
- Sustain / Vibrato / Transpose Control
- Tuning Control / Dual
- Keyboard Split Feature / Key Lighting
- Memory / M1 / M2 / M3 / One–Key / Follow / Ensemble
- USB–MIDI(APP) Jack / MIC Jack / Sustain Pedal Jack
- Audio Input Jack / Phone/Output Jack
- Product Dimensions: 930 x 304 x 94 (mm)
- Power Supply: 6 "AA" Batteries (Not Included) /
- DC 9V / AC Adaptor

KL-95U

600 TIMBRE音色 | 500 RHYTHM节奏 | 65 SONG示范曲

3步教学 3-STEP LESSON | MEMORY 状态记忆 | Audio Input 音频输入 | SUSTAIN PEDAL 延音踏板

USB / MIDI

Gross WT(kg)	25
Net WT(kg)	18.5
PCS/CTN	5
GIFTBOX Size(cm)	96 x 13 x 35
CTN Format(cm)	67 x 37 x 98.5

Loading: 20': 550 pcs
40': 1175 pcs
40'HQ: 1375 pcs

KEY LIGHT



61 KEYS STANDARD ELECTRONIC KEYBOARD



Specifications

- 61–Key Lighting Piano Keyboard
- LCD Display
- 255 Timbres / 255 Rhythms
- 50 Demonstration Songs / Keyboard Percussion
- Master Volume / Accom Volume / Transpose / Tempo Control
- Start / Stop / Sync / Fill–in / Metronome
- Single Chord / Fingered Chord / Chord Timbre / Chord Off
- Rhythm Programming Function / Record & Playback
- Sustain / Vibrato / Keyboard Split Feature / Key Lighting
- Memory / M1 / M2 / M3
- One–Key / Follow / Ensemble
- With Music Player (Udisk not included)
- Udisk Jack / MIC Jack
- Audio Input Jack / Phone / Output Jack
- Product Dimensions: 930 x 340 x 110 (mm)
- Power Supply: DC 12V / AC Adaptor

KL-91M

255 TIMBRE音色 | 255 RHYTHM节奏 | 50 SONG示范曲

3步教学 3-STEP LESSON | Audio Input 音频输入 | MEMORY 状态记忆

USB U盘接口

Gross WT(kg)	26
Net WT(kg)	17.8
PCS/CTN	5
GIFTBOX Size(cm)	96 x 13.2 x 38.5
CTN Format(cm)	69 x 40.5 x 98

Loading: 20': 495 pcs
40': 1040 pcs
40'HQ: 1225 pcs

KEY LIGHT

61 KEYS STANDARD ELECTRONIC KEYBOARD



Specifications

- 61–Key Standard Piano Keyboard
- LCD Display
- 255 Timbres / 255 Rhythms
- 50 Demonstration Songs: Demo. One / Demo. All
- Keyboard Percussion
- Master Volume / Accom Volume / Tempo Control
- Start / Stop / Sync / Fill–in / Metronome
- Single Chord / Fingered Chord
- Rhythm Programming Function / Record & Playback
- Sustain / Vibrato / Keyboard Split Feature
- One–Key / Follow / Ensemble
- Memory / M1 / M2 / M3 / M4
- Bluetooth / MIC Jack / Audio Input Jack / Phone / Output Jack
- Product Dimensions: 930 x 304 x 93 (mm)
- Power Supply: 6 “AA” Batteries (Not included) / DC 9V / AC Adaptor

JK-93B

255 TIMBRE 音色 | 255 RHYTHM 节奏 | 50 SONG 示范曲
3 步教学 3-STEP LESSON | Audio Input 音频输入 | MEMORY 状态记忆

蓝牙 BLUETOOTH

Gross WT(kg)	23.6
Net WT(kg)	16.5
PCS/CTN	5
GIFTBOX Size(cm)	96 x 13 x 35
CTN Format(cm)	67 x 37 x 98.5

Loading: 20': 560 pcs
40': 1160 pcs
40'HQ: 1380 pcs



Specifications

- 61–Key Simulation Piano Keyboard
- With Music Player (Udisk not included)
- LCD Display
- 200 Timbres / 200 Rhythms / 20 Demonstration Songs
- Keyboard Percussion
- Tempo / Master Volume / Accom Volume Control
- Single Finger / Fingered Chord / Chord Timbre / Chord Close
- Start / Stop / Sync / Fill–in / Metronome
- Rhythm Programming Function / Record & Playback
- Sustain / Vibrato / Tune / Transpose
- Keyboard Split Feature
- One–Key / Follow / Ensemble
- Udisk Jack / Audio Input Jack / Output Jack
- Product Dimensions: 965 x 366 x 120(mm)
- Power Supply: DC 12V / AC Adaptor

JK-69M

200 TIMBRE 音色 | 200 RHYTHM 节奏 | 20 SONG 示范曲
3 步教学 3-STEP LESSON | Audio Input 音频输入

USB U盘接口

Gross WT(kg)	25.3
Net WT(kg)	17.3
PCS/CTN	4
GIFTBOX Size(cm)	100.1 x 15.5 x 42
CTN Format(cm)	64.5 x 43 x 103

Loading: 20': 400 pcs
40': 820 pcs
40'HQ: 952 pcs

61 KEYS STANDARD ELECTRONIC KEYBOARD



Specifications

- 61–Key Standard Piano Keyboard
- LCD Display
- 255 Timbres / 255 Rhythms
- 50 Demonstration Songs / Keyboard Percussion
- Master Volume / Accom Volume / Tempo Control
- Start / Stop / Sync / Fill–in / Metronome
- Single Chord / Fingered Chord
- Rhythm Programming Function / Record & Playback
- Sustain / Vibrato / Keyboard Split Feature
- One–Key / Follow / Ensemble
- With Music Player (Udisk not included)
- Udisk Jack / MIC Jack / Audio Input Jack / Phone / Output Jack
- Product Dimensions: 930 x 304 x 93 (mm)
- Power Supply: 6 “AA” Batteries (Not included) / DC 9V / AC Adaptor

JK-90M

255 TIMBRE 音色 | 255 RHYTHM 节奏 | 50 SONG 示范曲
3 步教学 3-STEP LESSON | Audio Input 音频输入 | MEMORY 状态记忆

USB U盘接口

Gross WT(kg)	23.5
Net WT(kg)	16.3
PCS/CTN	5
GIFTBOX Size(cm)	96 x 13 x 35
CTN Format(cm)	67 x 37 x 98.5

Loading: 20': 560 pcs
40': 1160 pcs
40'HQ: 1380 pcs

61 KEYS STANDARD ELECTRONIC KEYBOARD



Specifications

- 61–Key Simulation Piano Keyboard
- LCD Display / 200 Timbres / 200 Rhythms
- 8 Panel Percussions / Keyboard Percussion
- 20 Demonstration Songs
- Tempo / Master Volume / Accom Volume Control
- Single Finger / Fingered Chord / Chord Timbre / Chord Close
- Start / Stop / Sync / Fill–in / Metronome
- Rhythm Programming Function / Record & Playback
- Sustain / Vibrato / Tune / Transpose
- Keyboard Split Feature
- One–Key / Follow / Ensemble
- Speaker Output(L/R) / Headphone Jack
- Product Dimensions: 965 x 366 x 120(mm)
- Power Supply: DC 12V / AC Adaptor

JK-68

200 TIMBRE音色 | 200 RHYTHM节奏 | 20 SONG示范曲

3 步教学 3-STEP LESSON

Gross WT(kg)	24.6
Net WT(kg)	16.6
PCS/CTN	4
GIFTBOX Size(cm)	100.1 x 15.5 x 42
CTN Format(cm)	64.5 x 43 x 103

Loading: 20': 380pcs
40': 800 pcs
40'HQ: 940 pcs



Specifications

- 61–Key Standard Piano Keyboard
- LCD Display
- 255 Timbres / 255 Rhythms
- 50 Demonstration Songs / Keyboard Percussion
- Master Volume / Accom Volume / Transpose / Tempo Control
- Start / Stop / Sync / Fill–in / Metronome
- Single Chord / Fingered Chord / Chord Timbre / Chord Off
- Rhythm Programming Function / Record & Playback
- Sustain / Vibrato / Keyboard Split Feature
- Memory / M1 / M2 / M3
- One–Key / Follow / Ensemble
- With Music Player (Udisk not included)
- Udisk Jack / MIC Jack / Audio Input Jack / Phone / Output Jack
- Product Dimensions: 930 x 340 x 110 (mm)
- Power Supply: DC 12V / AC Adaptor

JK-67M

255 TIMBRE音色 | 255 RHYTHM节奏 | 50 SONG示范曲

3 步教学 3-STEP LESSON | Audio Input 音频输入 | MEMORY 状态记忆

USB U盘接口

Gross WT(kg)	25.6
Net WT(kg)	17.3
PCS/CTN	5
GIFTBOX Size(cm)	96 x 13.2 x 38.5
CTN Format(cm)	69 x 40.5 x 98

Loading: 20': 495pcs
40': 1040 pcs
40'HQ: 1225 pcs

61 KEYS STANDARD ELECTRONIC KEYBOARD



Specifications

- 61–Key Lighting Piano Keyboard
- LED Display
- 255 Timbres / 255 Rhythms
- 50 Demonstration Songs / Keyboard Percussion
- Master Volume / Accom Volume / Tempo Control
- Start / Stop / Sync / Fill–in
- Single Chord / Fingered Chord
- Rhythm Programming Function / Record & Playback
- Sustain / Vibrato / Key Lighting
- One–Key / Follow / Ensemble
- With Music Player (Udisk not included)
- Udisk Jack / MIC Jack
- Audio Input Jack / Phone / Output Jack
- Product Dimensions: 930 x 304 x 93 (mm)
- Power Supply: 6 “AA” Batteries (Not included) / DC 9V / AC Adaptor

KL-90M

255 TIMBRE音色 | 255 RHYTHM节奏 | 50 SONG示范曲

3 步教学 3-STEP LESSON | Audio Input 音频输入 | USB U盘接口

Gross WT(kg)	24.8
Net WT(kg)	17.5
PCS/CTN	5
GIFTBOX Size(cm)	96 x 13 x 35
CTN Format(cm)	67 x 37 x 98.5

Loading: 20': 560 pcs
40': 1160 pcs
40'HQ: 1380 pcs

KEY LIGHT



Specifications

- 61–Key Standard Piano Keyboard
- LED Display
- 255 Timbres / 255 Rhythms
- 50 Demonstration Songs / Keyboard Percussion
- Master Volume / Accom Volume / Tempo Control
- Start / Stop / Sync / Fill–in
- Single Chord / Fingered Chord
- Rhythm Programming Function / Record & Playback
- Sustain / Vibrato
- One–Key / Follow / Ensemble
- With Music Player (Udisk not included)
- Udisk Jack / MIC Jack / Audio Input Jack / Phone / Output Jack
- Product Dimensions: 930 x 304 x 93 (mm)
- Power Supply: 6 “AA” Batteries (Not included) / DC 9V / AC Adaptor

JK-63M

255 TIMBRE音色 | 255 RHYTHM节奏 | 50 SONG示范曲

3 步教学 3-STEP LESSON | Audio Input 音频输入

USB U盘接口

Gross WT(kg)	23.5
Net WT(kg)	16.3
PCS/CTN	5
GIFTBOX Size(cm)	96 x 13 x 35
CTN Format(cm)	67 x 37 x 98.5

Loading: 20': 560 pcs
40': 1160 pcs
40'HQ: 1380 pcs





Specifications

JK-58/KL-58

- 61–Key Standard Piano Keyboard / Lighting Piano Keyboard
- 300 Timbres / 300 Rhythms
- 21 Demonstration Songs
- Keyboard Percussion
- Master Volume / Accom Volume / Transpose Control / Tempo Control
- Start / Stop / Sync / Fill–in / Metronome
- Single Chord / Fingered Chord
- Rhythm Programming Function / Record & Playback
- Sustain / Vibrato / Keyboard Split Feature / Click
- One–Key / Follow / Ensemble
- Memory / M1 / M2 / M3
- Phone/Output Jack / MIC Jack / Audio Input Jack
- Product Dimensions: 908 x 205 x 70 (mm)
- Power Supply: DC 9V / AC Adaptor

300 TIMBRE音色 | 300 RHYTHM节奏 | 21 SONG示范曲 | 3 步教学 3-STEP LESSON | Audio Input 音频输入 | MEMORY 状态记忆

Gross WT(kg)	19
Net WT(kg)	12.6
PCS/CTN	6
GIFTBOX Size(cm)	95.3 x 12.3 x 26
CTN Format(cm)	75.5 x 28 x 98

Loading: 20': 780 pcs
40': 1650 pcs
40'HQ: 1950 pcs



MIC



Specifications

JK-SD1

- 61-Key Simulation Piano Keyboard
- LED Display
- 255 Timbres / 255 Rhythms
- 24 Demonstration Songs
- Keyboard Percussion
- Master Volume / Accom Volume / Transpose
- Tempo Control
- Start/Stop / Sync / Fill-in / Metronome
- Single Chord / Fingered Chord
- Rhythm Programming Function / Record & Playback
- Sustain / Vibrato / Keyboard Split Feature
- 3-Step Lesson: One-Key / Follow / Ensemble
- MIC Jack / Phones / Output Jack
- Product Dimensions: 805 x 239 x 79 (mm)
- Power Supply: 6"AA" Batteries (Not included) / DC 9V / AC Adaptor

255 TIMBRE音色 | 255 RHYTHM节奏 | 24 SONG示范曲 | 3 步教学 3-STEP LESSON

Gross WT(kg)	22
Net WT(kg)	16.2
PCS/CTN	6
GIFTBOX Size(cm)	85 x11.5 x 29
CTN Format(cm)	72 x 30 x 87

Loading: 20':870pcs
40':1830pcs
40HQ: 2136pcs

Folding table stand available:









Specifications

- 61–Key Standard Piano Keyboard / Lighting Piano Keyboard
- LED Display
- 300 Timbres (5 Voice Direct Election) / 300 Rhythms
- 21 Demonstration Songs
- Keyboard Percussion
- Master Volume / Accom Volume / Transpose Control
- Tempo Control / Start / Stop / Sync / Fill–in / Metronome
- Single Chord / Fingered Chord
- Rhythm Programming Function / Record & Playback
- Sustain / Vibrato / Keyboard Split Feature / Click
- One–Key / Follow / Ensemble
- Memory / M1 / M2 / M3
- Phone/Output Jack / MIC Jack / Audio Input Jack
- Product Dimensions: 834 x 265 x 87 (mm)
- Power Supply: DC 9V / AC Adaptor

JK-27 / KL-27

300 TIMBRE音色 | 300 RHYTHM节奏 | 21 SONG示范曲 | Audio Input 音频输入 | 3 步教学 3-STEP LESSON

Gross WT(kg)	22
Net WT(kg)	15.3
PCS/CTN	6
GIFTBOX Size(cm)	87 x 12. 5 x 31.3
CTN Format(cm)	77.5 x 33 x 89.5

Loading: 20': 708 pcs
40': 1500 pcs
40'HQ: 1758 pcs



MIC



Specifications

- 61–Key Simulation Piano Keyboard
- LED Display
- 255 Timbres / 255 Rhythms / 24 Demonstration Songs
- Keyboard Percussion / 8 Panel Percussions
- Master Volume / Accom Volume / Tempo Control
- Start/Stop / Sync / Fill–in / Metronome
- Single Chord / Fingered Chord
- Rhythm Programming Function
- Record & Playback
- Sustain / Vibrato / Transpose
- One–Key / Follow / Ensemble
- MIC Jack / Phone / Output Jack
- Product Dimensions: 834 x 265 x 87 (mm)
- Power Supply: 6 “AA” Batteries (Not included) / DC 9V / AC Adaptor

JK-57

255 TIMBRE音色 | 255 RHYTHM节奏 | 24 SONG示范曲 | 3 步教学 3-STEP LESSON

Gross WT(kg)	22.3
Net WT(kg)	15.6
PCS/CTN	6
GIFTBOX Size(cm)	87 x 12.5 x 31.3
CTN Format(cm)	77.5 x 33 x 89.5

Loading: 20': 708 pcs
40': 1500 pcs
40'HQ:1758 pcs



MIC



Specifications

- 61–Key Lighting Piano Keyboard
- LED Display
- 255 Timbres / 255 Rhythms
- 50 Demonstration Songs / Keyboard Percussion
- Master Volume / Accom Volume / Tempo Control
- Start / Stop / Sync / Fill–in / Metronome
- Single Chord / Fingered Chord / Key Lighting
- Rhythm Programming Function / Record & Playback
- Sustain / Vibrato / Keyboard Split Feature / Transpose
- One–Key / Follow / Ensemble
- Memory / M1 / M2 / M3 / M4
- MIC Jack / Audio Input Jack / Phone / Output Jack
- Product Dimensions: 834 x 265 x 87 (mm)
- Power Supply: 6 “AA” Batteries (Not included) /
- DC 9V / AC Adaptor

KL-97

255 TIMBRE音色 | 255 RHYTHM节奏 | 50 SONG示范曲 | 3 步教学 3-STEP LESSON | Audio Input 音频输入 | MEMORY 状态记忆

Gross WT(kg)	22.3
Net WT(kg)	15.6
PCS/CTN	6
GIFTBOX Size(cm)	87 x 12.5 x 31.3
CTN Format(cm)	77.5 x 33 x 89.5

Loading: 20': 708 pcs
40': 1500 pcs
40'HQ: 1758 pcs

KEY LIGHT



MIC



Specifications

- 61–Key Keyboard
- With Music Player (Udisk not included)
- LED Display
- 300 Timbres / 128 Rhythms
- 15 Demonstration Songs / 61 Keyboard Percussion
- Master Volume / Chord Volume / Rhythm Volume Control
- Single Finger / Fingered Chord / Chord Timbre
- Start / Stop / Sync / Fill–in / Metronome / Tempo Control
- Rhythm Programming Function / Record & Playback
- Sustain / Vibrato / Transpose / Dual / Keyboard Split Feature
- One–Key / Follow / Ensemble
- Udisk Jack / Audio Input Jack / With Microphone Phone / Output Jack
- Product Dimensions: 859 x 322 x 104 (mm)
- Power Supply: 6 “AA” Batteries (Not included) / DC 9V / AC Adaptor

JK-62M

300 TIMBRE音色 | 128 RHYTHM节奏 | 15 SONG示范曲

3 步教学 3-STEP LESSON | Audio Input 音频输入

USB U盘接口

Gross WT(kg)	27
Net WT(kg)	19.2
PCS/CTN	6
GIFTBOX Size(cm)	88.3 x 13.5 x 36.8
CTN Format(cm)	83 x 38 x 91

Loading: 20': 564 pcs
40': 1200 pcs
40'HQ: 1410 pcs



MIC



Specifications

- 61–Key Keyboard
- LCD Display
- 255 Timbres / 255 Rhythms / 24 Demonstration Songs
- Keyboard Percussion / 8 Panel Percussions
- Master Volume / Accom Volume / Tempo Control
- Start/Stop / Sync / Fill–in
- Single Chord / Fingered Chord
- Rhythm Programming Function
- Record & Playback
- Sustain / Vibrato
- One–Key / Follow / Ensemble
- MIC Jack / Audio Input Jack / Phone / Output Jack
- Product Dimensions: 859 x 322 x 104 (mm)
- Power Supply: 6 “AA” Batteries (Not included) / DC 9V / AC Adaptor

JK-61

255 TIMBRE音色 | 255 RHYTHM节奏 | 24 SONG示范曲

3 步教学 3-STEP LESSON | Audio Input 音频输入

Gross WT(kg)	27.1
Net WT(kg)	19.2
PCS/CTN	6
GIFTBOX Size(cm)	88.3 x 13.5 x 36. 8
CTN Format(cm)	83 x 38 x 91

Loading: 20': 564 pcs
40': 1200 pcs
40'HQ: 1410 pcs



MIC



Specifications

- 61–Key Keyboard
- LED Display
- 255 Timbres / 255 Rhythms / 24 Demonstration Songs
- Keyboard Percussion / 8 Panel Percussions
- Master Volume / Accom Volume / Tempo Control
- Start / Stop / Sync / Fill–in
- Auto Chord / Chord Timbre
- Rhythm Programming Function / Record & Playback
- Sustain / Vibrato
- One–Key / Follow / Ensemble
- MIC Jack / Audio Input Jack / Phone / Output Jack
- Product Dimensions: 859 x 322 x 104 (mm)
- Power Supply: 6 “AA” Batteries (Not included) / DC 9V / AC Adaptor

JK-60

255 TIMBRE音色 | 255 RHYTHM节奏 | 24 SONG示范曲

3 步教学 3-STEP LESSON | Audio Input 音频输入

Gross WT(kg)	26.5
Net WT(kg)	18.9
PCS/CTN	6
GIFTBOX Size(cm)	88.3 x 13.5 x 36.8
CTN Format(cm)	83 x 38 x 91

Loading: 20': 564 pcs
40': 1200 pcs
40'HQ: 1410 pcs



MIC



JK-33

Specifications

- 61–Key
- LED Display
- 255 Timbres / 255 Rhythms
- 24 Demonstration Songs
- Keyboard Percussion
- Master Volume / Accom Volume / Tempo Control
- Start/Stop / Sync / Fill–in
- Single Chord / Fingered Chord
- Rhythm Programming Function / Record & Playback
- Sustain / Vibrato
- One–Key / Follow / Ensemble
- MIC Jack / Phone / Output Jack
- Product Dimensions: 752x 220 x 63 (mm)
- DC 9V / AC Adaptor

255 RHYTHM节奏 | 255 TIMBRE音色 | 24 SONG示范曲

Gross WT(kg)	24
Net WT(kg)	16
PCS/CTN	10
GIFTBOX Size(cm)	78.2 x 10.5 x 26
CTN Format(cm)	55.5 x 55 x 81

Loading: 20': 1110pcs
40': 2300pcs
40HQ: 2720pcs



MIC



JK-54

Specifications

- 54–Key Simulation Piano Keyboard
- LCD Display
- 255 Timbres / 255 Rhythms
- 24 Demonstration Songs
- Keyboard Percussion / 8 Panel Percussions
- Master Volume / Accom Volume / Tempo Control
- Start/Stop / Sync / Fill–in / Metronome
- Single Chord / Fingered Chord
- Rhythm Programming Function / Record & Playback
- Sustain / Vibrato / Transpose
- One–Key / Follow / Ensemble
- MIC Jack / Phone / Output Jack
- Product Dimensions: 834 x 265 x 87 (mm)
- Power Supply: 6 “AA” Batteries (Not included) / DC 9V / AC Adaptor

255 TIMBRE音色 | 255 RHYTHM节奏 | 24 SONG示范曲 | 3步教学 3-STEP LESSON

Gross WT(kg)	23.2
Net WT(kg)	16.5
PCS/CTN	6
GIFTBOX Size(cm)	96 x 13 x 35
CTN Format(cm)	77.5 x 33 x 89.5

Loading: 20': 690 pcs
40': 1480 pcs
40'HQ: 1770 pcs



MIC



K-10M



MIC

Specifications

- 54–Key Keyboard
- With Music Player (Udisk not included)
- 16 Timbres / 8 Rhythms / 8 Panel Percussions
- 8 Demonstration Songs / Demo One / Demo All
- Master & Accom Volume Control / Tempo Control
- Single Finger / Fingered Chord/ Chord Close / Fill–in / Stop
- Rhythm Programming Function / Record & Playback
- Sustain / Vibrato
- One–Key / Ensemble
- USB Flash Disk Jack
- With Microphone / Speaker Output
- Product Dimensions: 745 x 262 x 83（mm）
- Power Supply: 6*AA* Batteries(Not included)/ DC 9V / AC Adaptor

16 TIMBRE音色 | 8 RHYTHM节奏 | 8 SONG示范曲

Gross WT(kg)	27.8
Net WT(kg)	20.2
PCS/CTN	10
GIFTBOX Size(cm)	77 x 11 x 29.2
CTN Format(cm)	59 x 57 x 80

Loading: 20': 1000pcs
40': 2120pcs
40HQ: 2500pcs



K-09



MIC

Specifications

- 54 Key Keyboard
- LED Display
- 255 Timbres / 255 Rhythms / 8 Percussions
- 24 Demonstration Songs
- Master & Accom Volume Control
- Vibrato / Sustain / Keyboard Split Feature
- Start/Stop / Sync / Fill–in / Tempo Control
- Single Finger / Fingered Chord
- One Key / Follow / Ensemble
- Rhythm Programming Function / Record & Playback
- With Microphone / Speaker Output
- Product Dimensions: 745 x 262 x 83 (mm)
- Power Supply: 6 “AA” Batteries (Not Included) / DC 9V / AC Adaptor

255 TIMBRE音色 | 255 RHYTHM节奏 | 24 SONG示范曲

Gross WT(kg)	27.8
Net WT(kg)	20.2
PCS/CTN	10
GIFTBOX Size(cm)	77 x 11 x 29.2
CTN Format(cm)	59 x 57 x 80

Loading: 20': 1000pcs
40': 2120pcs
40HQ: 2500pcs



K-07



MIC

Specifications

- 54 Key Keyboard
- LED Display
- 255 Timbres / 255 Rhythms / 8 Percussions
- 24 Demonstration Songs
- Master & Accom Volume Control
- Vibrato / Sustain / Keyboard Split Feature
- Start/Stop / Sync / Fill–in / Tempo Control
- Single Finger / Fingered Chord
- One Key / Follow / Ensemble
- Rhythm Programming Function
- Record & Playback
- With Microphone / Speaker Output
- Product Dimensions: 755 x 289 x 93(mm)
- Power Supply: 6 “AA” Batteries (Not Included) / DC 9V / AC Adaptor

255 TIMBRE音色 | 255 RHYTHM节奏 | 24 SONG示范曲

Gross WT(kg)	26.3
Net WT(kg)	18.72
PCS/CTN	8
GIFTBOX Size(cm)	79.5 x 11.8 x 32.5
CTN Format(cm)	66.5 x 50 x 82

Loading: 20': 800pcs
40': 1680pcs
40HQ: 1960pcs



K-08



MIC

Specifications

- 54–Key Keyboard
- 20 Timbres / 10 Rhythms / 10 Panel Percussions
- 8 Demonstration Songs / Demo One / Demo All
- Master & Accom Volume Control
- Vibrato / Sustain
- Sync / Fill–in / Stop / Tempo Control
- Single Finger / Fingered Chord / Chord Close
- One–Key / Follow
- Rhythm Programming Function
- Record & Playback
- With Microphone / Speaker Output
- Product Dimensions: 755 x 289 x 92 (mm)
- Power Supply: 6 “AA” Batteries (Not included) / DC 9V / AC Adaptor

20 TIMBRE音色 | 10 RHYTHM节奏 | 8 SONG示范曲

Gross WT(kg)	25.6
Net WT(kg)	18.1
PCS/CTN	8
GIFTBOX Size(cm)	79.5 x 11.8 x 32.5
CTN Format(cm)	66.5 x 50 x 82

Loading: 20': 800pcs
40': 1680pcs
40HQ: 1960pcs



K-11



MIC

Specifications

- 54–Key Keyboard
- 16 Timbres / 8 Rhythms / 8 Panel Percussions
- 8 Demonstration Songs / Demo One / Demo All
- Master & Accom Volume Control /Tempo Control
- Single Finger / Fingered Chord/ Chord Close / Fill–in / Stop
- Rhythm Programming Function / Record & Playback
- One–Key / Ensemble / Special Effect
- With Microphone / Speaker Output
- Product Dimensions: 745 x 262 x 83 (mm)
- Power Supply: 6 “AA” Batteries(Not included) / DC 9V / AC Adaptor

16 TIMBRE音色 | 8 RHYTHM节奏 | 8 SONG示范曲

Gross WT(kg)	27.6
Net WT(kg)	20
PCS/CTN	10
GIFTBOX Size(cm)	77 x 11 x 29.2
CTN Format(cm)	59 x 57 x 80

Loading: 20': 1000pcs
40': 2120pcs
40HQ: 2500pcs



M-01

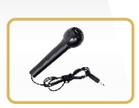

MIC

Specifications

- 49–Key Keyboard
- 16 Timbres / 10 Rhythms / 8 Panel Percussions
- 6 Demonstration Songs / 51–level Tempo Control
- 8–grade Master Volume Control
- Single Finger / Fingered Chord / Fill–in / Stop
- Rhythm Programming Function / Record & Playback
- Vibrato / Sustain / Echo
- One–Key / Guide Function
- With Microphone / Speaker Output
- Product Dimensions: 745 × 262 × 83 (mm)
- Power Supply: 6 “AA” Batteries (Not included)/ DC 9V / AC Adaptor

16 TIMBRE音色 | 10 RHYTHM节奏 | 6 SONG示范曲

Gross WT(kg)	27.4
Net WT(kg)	19.8
PCS/CTN	10
GIFTBOX Size(cm)	77 x 11 x 29.2
CTN Format(cm)	59 x 57 x 80

Loading: 20': 1000pcs
40': 2120pcs
40HQ: 2500pcs



Specifications

- 25 mid–size velocity–sensitive keys with adjustable velocity curve
- 3–digit 7–segment LED display
- Controllers for real–time performance: knob and joystick
- Knob and joystick functions adjustable
- Comprehensive CC control messages capability
- Keyboard split (two channels)
- One–touch chord and intelligent scale
- Exclusive PC keyboard mode
- Arpeggiators with 13 presets and multiple settings
- Built–in MIDI clock, can serve as a clock source
- MIDI transport control
- Customizable system–exclusive message sending capability
- Pedal and 5–pin MIDI output port (adapter required)
- Pedal, Knob and joystick functions adjustable
- USB/MIDI combo power input port
- Product Dimensions: 364 x 106 x 41(mm)

Gross WT(kg)	16.5
Net WT(kg)	12.5
PCS/CTN	24
GIFTBOX Size(cm)	39.5x13.2x6.5
CTN Format(cm)	78 x 28 x 42

Loading: 20': 7080pcs

MID-25

USB / MIDI



- Two–dimensional joystick



- Infinitely rotating knob
- Type–C for power and data transmitting
- Pedal port to expand the controller



★ Teaching APP Available by USB MIDI.

Specifications

WP-882

- 88–Key Standard Keyboard With Touch Function
- Maximum Polyphony: 32
- 140 Timbres: 6 Voice Direct Election / GM Timbres
- 200 Rhythms / 16 Demonstration Songs
- Metronome / Tempo Control
- Volume: Master Volume / Lower Volume / Upper Volume Metronome Volume
- Single Finger / Fingered Chord / Chord Timbre
- Start / Stop / Sync / Fill–in / Intro / Ending
- Rhythm Programming Function / Record & Playback
- Lesson / Keyboard Split Feature / Dual / Keyboard Percussion
- Click / Touch Control / Sustain / Vibrato / Transpose Control / Octave Control
- Memory / M1 / M2 / M3
- With Music Player (Udisk not included)
- Headphone Jack 1 / Headphone Jack 2 / Audio Input Jack / Output Jack Pedal Jack / USB–MIDI(APP) Jack / Udisk Jack
- Product Dimensions: 1298 × 285 × 112 (mm)
- DC 12V / AC Adaptor

140 TIMBRE音色 | 200 RHYTHM节奏 | 16 SONG示范曲
Audio Input 音频输入 | 2-Headphone 双耳机输出 | Pedal 可支持3踏板
USB / MIDI

Gross WT(kg)	16.7
Net WT(kg)	13.9
PCS/CTN	1
CTN Format(cm)	135 x 35 x 21.5

Loading: 20': 265 pcs
40': 560 pcs
40'HQ: 655 pcs

88 KEYS PORTABLE DIGITAL PIANO



★ Teaching APP Available by USB MIDI.

Specifications

DP-881

- 88–Key Standard Keyboard With Touch Function
- Maximum Polyphony: 32
- 140 Timbres: 6 Voice Direct Election / Keyboard Percussion / GM Timbres
- 16 Demonstration Songs
- Metronome / Tempo Control
- Volume: Master Volume / Split Volume
- Lower Volume / Upper Volume / Metronome Volume
- Record & Playback
- Lesson / Keyboard Split Feature / Dual
- Click / Touch Control / Sustain / Vibrato
- Transpose Control / Octave Control
- With Music Player (Udisk not included)
- Headphone Jack 1 / Headphone Jack 2
- Audio Input Jack / Output Jack
- Pedal Jack
- USB–MIDI(APP) Jack / Udisk Jack
- Product Dimensions: 1298 × 285 × 112 (mm)
- DC 12V / AC Adaptor

140 TIMBRE音色 | 16 SONG示范曲 | TOUCH 力度
UDISK U盘接口 | Pedal 可支持3踏板
USB / MIDI

Gross WT(kg)	8.9
Net WT(kg)	6.7
PCS/CTN	1
CTN Format(cm)	135 x 16 x 36.5

Loading: 20': 345 pcs
40': 725 pcs
40'HQ: 850 pcs

88 KEYS PORTABLE DIGITAL PIANO



★ Teaching APP Available by USB MIDI.

Specifications

- 88-Key Standard Keyboard With Touch Function
- Maximum Polyphony: 32
- 140 Timbres: 6 Voice Direct Election / Keyboard Percussion / GM Timbres
- 16 Demonstration Songs
- Metronome / Tempo Control
- Volume: Master Volume / Split Volume
- Lower Volume / Upper Volume / Metronome Volume
- Record & Playback
- Lesson / Keyboard Split Feature / Dual
- Click / Touch Control / Sustain / Vibrato
- Transpose Control / Octave Control
- With Music Player (Udisk not included)
- Headphone Jack 1 / Headphone Jack 2
- Audio Input Jack / Output Jack
- Pedal Jack
- USB-MIDI(APP) Jack / Udisk Jack
- Product Dimensions: 1298 × 285 × 112 (mm)
- DC 12V / AC Adaptor

DP-881L

140 TIMBRE音色 | 16 SONG示范曲 | TOUCH 力度

UDISK U盘接口 | Pedal 可支持3踏板

USB / MIDI

KEY LIGHT

Gross WT(kg)	8.9
Net WT(kg)	6.7
PCS/CTN	1
CTN Format(cm)	135 x 16 x 36.5

Loading: 20': 345 pcs
40': 725 pcs
40'HQ: 850 pcs

UNIVERSAL STAND FOR ELECTRONIC KEYBOARD

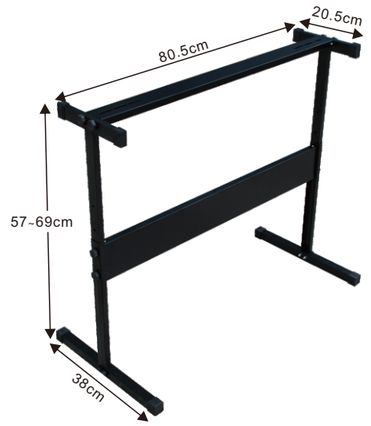

H SHAPE STAND

Gross WT(kg)	26
Net WT(kg)	22.5
PCS/CTN	12
CTN Format(cm)	86 x 39.5 x 24.5

Z SHAPE STAND

Gross WT(kg)	29.3
Net WT(kg)	25.6
PCS/CTN	12
CTN Format(cm)	79X33X43





X SHAPE STAND

Gross WT(kg)	20.5
Net WT(kg)	18
PCS/CTN	10
CTN Format(cm)	102X25X42

X-2 SHAPE STAND

Gross WT(kg)	16.5
Net WT(kg)	12
PCS/CTN	5
CTN Format(cm)	105 x 39 x 47

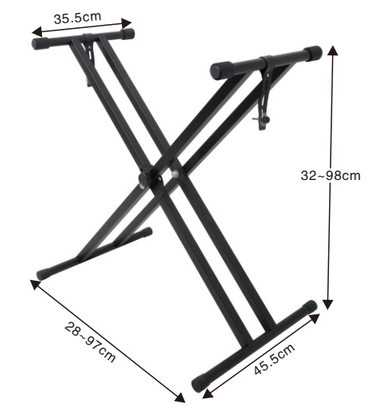

ACCESSORIES FOR ELECTRONIC KEYBOARD



B–01



B–02

BENCH

B–01

Gross WT(kg)	16
Net WT(kg)	13.5
PCS/CTN	5
CTN Format(cm)	60X33X65

B–02

Gross WT(kg)	16.2
Net WT(kg)	13.5
PCS/CTN	5
CTN Format(cm)	73X33X65

HEADPHONE







CERTIFICATED ADAPTORS



UL



GS



BS



SAA



PSE